A new computational approach to improve the global analysis of dynamical systems

Stefano Lenci[1], **Pierpaolo Belardinelli**[1]

[1] *Department of Civil and Building Engineering, and Architecture*
Polytechnic University of Marche, Via Brecce Bianche, 60131 Ancona, Italy
e-mail: p.belardinelli@univpm.it, lenci@univpm.it

Abstract

With the aim to improve the safety assessment of mechanical structures, this work presents refined results in the framework of the dynamical integrity analysis of dynamical systems. Thanks to the use of the parallel computing with a distributed memory approach, the resolution of the analysis and the dimension of the system to be investigated numerically can be enhanced. This allows to undertake new appealing and useful studies, among which the following are developed in this work: i) the extension of integrity profiles, usually built only for "discrete" values of the varying parameter, to "continuous" curves by building a huge number of basins of attraction, ii) the computation of the full four-dimensional (4D) domain of attraction for a linear oscillator coupled with a nonlinear absorber. This latter part is aimed to provide insights into the reliability of integrity measures for a two mechanical degrees-of-freedom system, by accounting for the full, or for sections of, the real phase-space.

Keywords: Basins of attraction, dynamical integrity, parallel computing, multidimensional systems

1. Introduction

In practical application, the actual capabilities of the designed structure cannot be estimated by means of the mere concept of the classical theoretical stability [1]. Although small, finite dynamical perturbations and imperfections can largely modify the behaviour leading to severe outcomes. The ability to accommodate tolerably large variation in the domain of the initial conditions without undesirables issues, i.e. the "practical stability", represents the true safety of the designed structure.

In order to visualize how the response of the systems changes due to finite perturbations, a global analysis is required and basins of attraction must be constructed. Describing basins of attraction and quantifying their sizes and conformations has both theoretical and practical significance. Thus, it is vital to asses if the basin is large and compact enough to resist the noise and perturbations, leading the system to preserve its safe dynamical behaviour [2].

Actually, the common approach in the literature is to evaluate the dynamical integrity of the system on the base of bidimensional sections of the full, high dimensional, phase-space. This is due to the massive number of numerical integrations necessary to evaluate the long-term dynamics, and to limitations in the memory allocation of higher-dimensional grids.

The goal of this work is to provide a glimpse of the achievements that can be obtained by overcoming these constrains with reasonable computational time. Here, an algorithm based on the message passing interface protocol is used to split the computation and the memory allocation across a large number of computational process units [3]. This contribution presents advances in the evaluation of integrity profiles usually sketched only for few values of the control parameter. In addition to a major resolution, and thus a better understanding, this permits to detect sudden jumps of the dynamical integrity, caused by the appearance of new attractors, and rare attractors. Finally, an approach to the global dynamics of multi-degrees-of-freedom systems is presented. The multidimensional analysis permits to unveil, by means of 3D plots, the very complex organization and tangling of the full basins of attractions.

2. Applications

By exploiting the advantages given by the parallel computing in terms of CPU time and resources administration, we show some higher dimensional basins of attractions, and related applications, which are necessary for global analyses.

2.1. *Seamless parametric variation of basins of attraction*

The two-well/bistable Duffing oscillator is investigated by performing a "continuous" parametric analysis of the system.

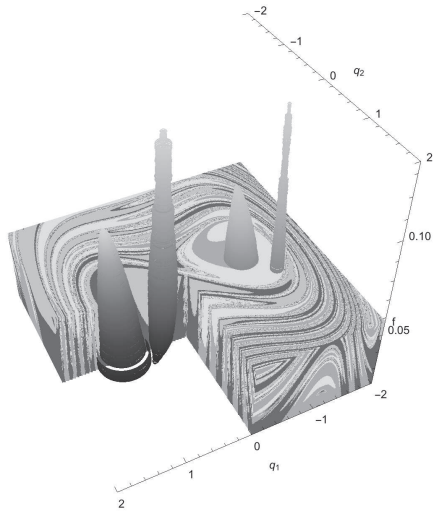

Figure 1: 3D variation of the LIM for both left and right attractors. For the present analysis a linear viscous damping $\zeta = 0.025$ is considered, whereas other constant parameters are $\gamma = 1$, $\Omega = 1.2$. Only 2D sections ($f = const$) are proper basins of attraction.

The governing equation in the state space formulation reads

$$\begin{cases} \dot{q}_1 = q_2, \\ \dot{q}_2 = -2\zeta q_2 + q_1 - \gamma q_1^3 + f\cos(\Omega t)\,. \end{cases} \tag{1}$$

The excitation amplitude ($f \in [0.02, 0.135]$) is chosen as driving parameter for the analysis with a small step $\Delta f = 0.000254154$ between different states of the system. A discretization grid of the phase-space $\{q_1, q_2\}$ composed of 500^2 cells is utilized. Three-dimensional sweeps for Local Integrity Measure (LIM), the radius of the largest hyper-sphere entirely contained in the basin centred at the attractor (circle in 2D), are shown in Fig. 1. It can be observed the sudden reduction of the values for the non-resonant attractors, in connection with the appearance and growth of the resonant attractors, which then also disappear over a longer parameter interval. The characterization of safe working regions, based on three-dimensional integrity manifolds, is an added-value to the mere integrity profiles. Indeed, it evaluates the magnitude of the integrity measure, combined with its actual space localization, as function of a design parameter. Moreover, the parametric analysis performed with a reduced step, allows to visualize the continuous metamorphosis of the basins. It represents a new useful feature for the determination of critical thresholds towards dynamically non-integer domains.

2.2. Multi-dimensional dynamical integrity measures

The system under investigation is composed of a linear oscillator (primary oscillator) coupled with a second, nonlinear, oscillator (secondary oscillator or absorber) [4]:

$$\begin{cases} \dot{q}_1 = q_2\,, \\ \dot{q}_2 = -2\gamma_1 q_2 - 2\epsilon\hat{\gamma}_N\,(q_2 - q_4) - q_1 - \epsilon\Omega^2\,(q_1 - q_3) \\ \qquad -F^2\epsilon\Omega_N^2(q_1 - q_3)^3 + \sin(\omega\tau)\,, \\ \dot{q}_3 = q_4\,, \\ \dot{q}_4 = -2\hat{\gamma}_N\,(q_4 - q_2) - \Omega^2\,(q_3 - q_1) - F^2\Omega_N^2(q_3 - q_1)^3. \end{cases} \tag{2}$$

The considered parameters are $\gamma_1 = 0.02$, $\epsilon = 0.1$, $\hat{\gamma}_N = 0.002$, $\Omega = 0$, $F = 0.35$, $\Omega_N = 0.09$ and $\omega = 1.8$.

Basins of attraction are completely determined in all the phase space dimensions q_i for $i = 1, .., 4$, bounded in $[-80, 80]$. The discretization of the domain with a step size of 0.804020 leads to a total grid of $1'600'000'000$ cells. The analyzed configuration for the two mechanical degrees-of-freedom system, presents three stable attractors, two of period-1 and one of period-3; it retraces that explained in detail by Eason et al. [5]. The attractor shown in Fig. (2) presents a compact central region surrounded by a large region where the other basins intermix in an apparently fractal way.

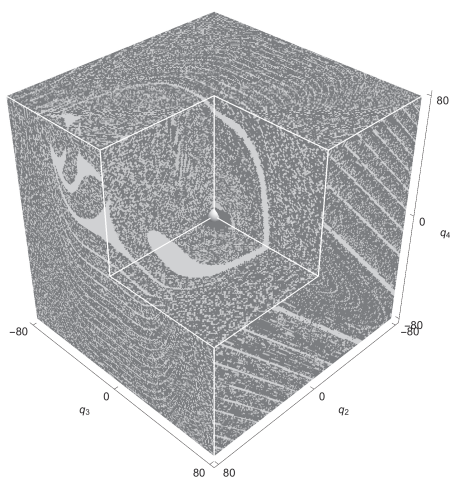

Figure 2: A 3D section of the calculated 4D basin. The figure is carved at the position of the attractor: period-1 attractor located at $\mathbf{q}^T = \{-0.014478, -0.802737, 0.000993, 0.000019\}$; section shown $[-0.014478, \cdot, \cdot, \cdot]$.

Dynamical integrity measures are performed by accounting for 2, 3 and 4 dimensions of the basin. The computation of the Local Integrity Measure (LIM) [1] reveals that lower dimension sections always overestimate the "true" measure, so that they are not on the safe side. In some cases this overestimation can be important also from a quantitative point of view. Conversely, for the Integrity Factor (IF) [1], whose measure is not constrained to the attractor, additional dimensions of the phase-space represent further degrees of freedom for the hyper-sphere entirely contained in the basin. Thus the IF computed on the full dimensional phase-space converges to a value not necessary less than that of reduced analysis.

3. Conclusions

Extending the actual limits in the computation of basins of attraction, improved results for the integrity dynamical analysis have been obtained. The presented results, computationally expensive, have been obtained using a parallel algorithm in the framework of a distributed memory approach, which is considered a viable tool for the global analysis of dynamical systems. A parametric investigation has been performed with a reduced step size, getting a nearly seamless evolution of integrity measures. The study of the basins erosion through the distribution of the integrity measures in phase-space with respect to the driving parameter permits to visualize and to identify safe regions.

Furthermore, dealing with higher-dimensional systems, basins's topology and more reliable integrity analyses can be achieved only accounting for the full phase-space. A more close view on the real shape of multidimensional basins can be obtained, this helps to understand the proper capabilities of the system based on multidimensional safe manifolds. It is found that in general the integrity measures computed on low dimensional sections of the full basins do not estimate properly the compact part surrounding the attractor, and thus the underestimate safety of the system.

References

[1] Rega, G. and Lenci, S., A global dynamics perspective for system safety from macro- to nanomechanics: Analysis, control, and design engineering, *Applied Mechanics Reviews*, **67**(5):050802, 10 (2015).

[2] Soliman, M.S. and Thompson, J.M.T., Global dynamics underlying sharp basin erosion in nonlinear driven oscillators. *Phys. Rev. A*, **45**:3425-3431, (1992)

[3] Belardinelli, P. and Lenci, S., An efficient parallel implementation of cell mapping methods for MDOF systems, *Nonlinear Dynamics*, **86**(4):1-12, (2016).

[4] Nicholas, A. and Frank, S., Exploring the performance of a nonlinear tuned mass damper, *Journal of Sound and Vibration*, **319**(1-2):445-462, (2009).

[5] Eason, R.P., Dick, A.J. and Nagarajaiah, S., Numerical investigation of coexisting high and low amplitude responses and safe basin erosion for a coupled linear oscillator and nonlinear absorber system. *Journal of Sound and Vibration*, **333**(15):3490-3504, (2014).