Influence of the piezoelectric effect on the dynamic behaviour of an active blade

Jarosław Gawryluk[1*], **Andrzej Mitura**[2*] **and Andrzej Teter**[3*]

[1]*Faculty of Mechanical Engineering, Department of Applied Mechanics, Lublin University of Technology*
Nadbystrzycka 36, 20-618 Lublin, Poland
e-mail: j.gawryluk@pollub.pl

[2]*Faculty of Mechanical Engineering, Department of Applied Mechanics, Lublin University of Technology*
Nadbystrzycka 36, 20-618 Lublin, Poland
e-mail: a.mitura@pollub.pl

[3]*Faculty of Mechanical Engineering, Department of Applied Mechanics, Lublin University of Technology*
Nadbystrzycka 36, 20-618 Lublin, Poland
e-mail: a.teter@pollub.pl

Abstract

The aim of the paper is to perform numerical and experimental studies of an active rotor with three composite blades. The test stand of the rotor consists of a hub with drive shaft and three grips with laminate beams equipped in active elements. The modern actuators, so called the macro fiber composite (MFC), characterized by complicated construction were applied. Using standard tools of Abaqus software package the simplified model of macro fiber composite element was developed. Therefore, the presented model is made of orthotropic and homogenous piezoelectric material, where voltage is applied to opposite specimen faces. In numerical model the MFC elements with alternative parameters were mounted on the surface of the each glass-epoxy laminate blades. The influence of the specific MFC model parameters on the dynamic behaviour of the rotating system was examined. Numerical analysis for the constant supply voltages of the actuators and different values of the constant rotating velocity were performed. A selected numerical results have been validated in experimental tests. The obtained results demonstrate that the stiffening/softening effect can be generate by piezoelectric element. However, its effectiveness strongly depends on the alternative piezoelectric constant value.

Keywords: active rotor, FEM, stiffening effect, MFC, vibration, eigenvalue problem, experiment

1. Introduction

The finite element method is used to investigate the eigenvalue problem of laminated composite structures. The problem of rotating active composite structures is particularly interesting [2,5]. The paper is focused on determining the influence of the piezoelectric effect on the dynamic behaviour of an active rotor with three composite blades. To investigate the dynamic behaviour of the system, a numerical modal analysis is performed. Next, the simulation results are compared with the findings of experimental tests.

2. Object of the study

The examined rotor (Fig. 1) composed of a hub, a drive shaft, three grips and three composite blades with macro fiber composite actuators.

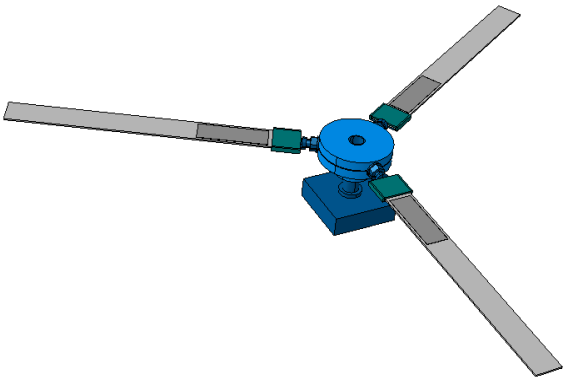

Figure 1: Three-dimensional model of the active rotor

The M-8528-P1 type of MFC active element with piezoelectric d_{33} effect was used. The rotor blades were made of glass-epoxy unidirectional composite prepreg (CS). The tested beams had $[\pm 45/90]_s$ layers configuration.

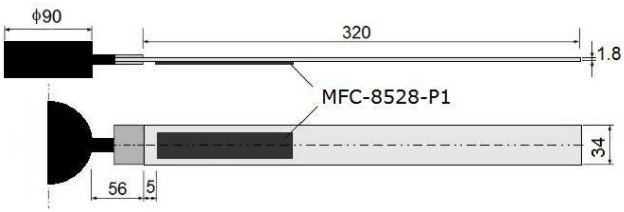

Figure 2: Dimensions of one blade in mm

The geometrical dimensions of the active blade are given in Fig. 2. The hub was made of Polyamide 6 (PA) and the drive shaft was made of steel (FE). Moreover, the grip was made of steel and aluminium alloy (AL). The mechanical properties of all materials are given in Table 1.

Table 1: Mechanical properties of the tested materials

Parameter	FE	PA	AL	CS	MFC
Longitudinal modulus in GPa	210	1.6	69	46.4	30.3
Transverse modulus in GPa				14.9	15.8
Shear modulus in GPa	80	0.6	29.5	5.2	5.5
Poisson's ratio [-]	0.3	0.42	0.33	0.27	0.31
Density in kg/m^3	7850	1130	2700	2032	5440

* This paper was financially supported by the Ministerial Research Project No. DEC-2012/07/B/ST8/03931 financed by the Polish National Science Centre.

3. Numerical model of the active rotor

The FE model of the composite blades was made using continuum shell finite elements (SC8R) with reduced integration. The sequence of the laminate layers was shaped according to the layup-ply technique. The FEM model of the actuator was constructed using C3D20E solid elements. The numerical models of other elements were designed using the C3D20RE and C3D10 solid elements. The mechanical boundary conditions of the numerical model were realized by restraining the nodes located on the foundation all of translational degrees of freedom. The combination of all parts was determined by defining interactions as "TIE," which resulted in linking the degrees of freedom of the nodes in contact on the appropriate surfaces of the model [1].

Rotation at a constant angular velocity generates a constant centrifugal force. This effect was taken into account in the FE model by introducing a mechanical load. The voltage supplied to the MFC element was defined by electrical boundary conditions. The MFC element consists of many PZT tubes and the voltage is applied at many poles, therefore a continuous FE-model was built. As a solution, the effective piezoelectric constant d_{33}* has to be defined for whole MCF element.

4. Influence of the piezoelectric effect on static and dynamic responses

According to the literature [4,7], the optimal simplified value of the effective piezoelectric constant d_{33}* for this transducer in static analysis is equal $1.01*10^{-7}$ m/V. The validation of the static deflection of the composite beam with MFC element in the numerical and experimental analysis was described in the paper [3]. All results showed a very good agreement due to the accepted criterion.

In order to dynamics of the active rotor, numerical modal analyses were performed. The Lanczos method [1] in finite element analysis was used. The simulations were performed for selected values of angular velocity. Next, the first experimental bending eigenfrequency of the rotor rotated at a constant angular velocity was validated and compared with results of the FE simulation (Fig. 3).

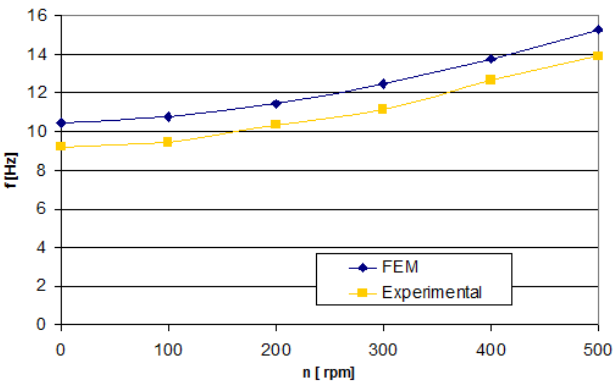

Figure 3: First bending eigenfrequency in function of rotational velocity of the rotor

The obtained characteristic indicates that the eigenfrequency of the first bending mode increases with increasing the rotational velocity. This phenomenon is known as the centrifugal stiffening effect [6].

Next, the first eigenfrequency of the fixed rotor was determined applying the selected constant supply voltage and the effective piezoelectric constant d_{33}*. The constant voltage supply to the MFC actuator caused initial stresses/deflection. Due to that effect, the eigenfrequency value may be changed. The nature of these changes (i.e., increase or decrease) depends on the voltage sign. The numerical results for two different values of d_{33}* are compared with experimental results in Figure 4. In this case, the effectiveness of active stiffening effect depends on the effective value of d_{33}*.

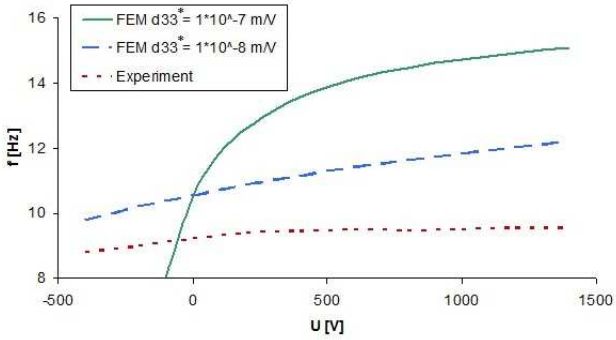

Figure 4: First bending eigenfrequency versus voltage for two alternative piezoelectric constant d_{33}* values.

5. Conclusion

The model of a active rotor was prepared by the finite element method using the commercial system Abaqus. First eigenfrequency of the rotor for selected angular velocity was determined. The value of the first bending eigenfrequency increased with increasing the rotational velocity (the centrifugal stiffening). The numerical results revealed that the active stiffening effect depends on the alternative piezoelectric constant d_{33}* value. Finally, the change of first eigenfrequency as a function of the selected voltage and different values of the constant rotational velocity was presented. The numerical observations were validated experimentally.

References

[1] Abaqus 6.14 documentation.

[2] Chopra, I. and Sirohi, J., *Smart structures theory*, First edition, New York: Cambridge University Press, 2013.

[3] Gawryluk, J., Mitura, A. and Teter, A., Experimental and numerical studies on the static deflection of the composite beam with the MFC element, *Mechanics and Mechanical Engineering*, 20, pp. 97-108, 2016.

[4] Latalski, J., Modelling of macro fiber composite piezoelectric active elements in Abaqus system, *Eksploatacja i Niezawodnosc - Maintenance and Reliability*, 4, pp. 72-78, 2011.

[5] Latalski, J., Georgiade, F. and Warminski, J., Rational placement of a macro fibre composite actuator in composite rotating beams, *J Phys: Conf Ser*, 382, pp. 12–21, 2012.

[6] Mitura, A., Gawryluk, J. and Teter, A., Numerical and experimental studies on the rotating rotor with three active composite blades. *Eksploatacja i Niezawodność (Maintenance and Reliability)* in press, 2017.

[7] Teter, A. and Gawryluk, J., Experimental modal analysis of a rotor with active composite blades, *Composite Structures*, 153, pp. 451-467, 2016.